Pin configuration for Lithium Button Type batteries

Fig.1

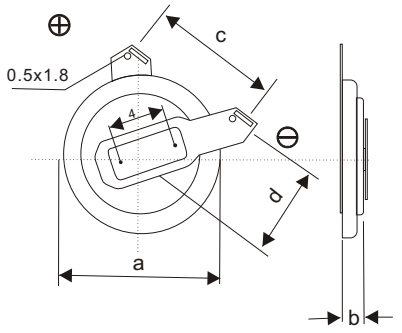

Fig.2

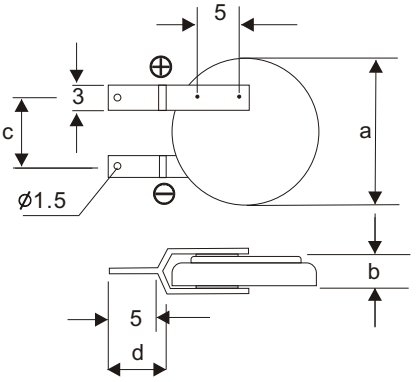

Fig.3

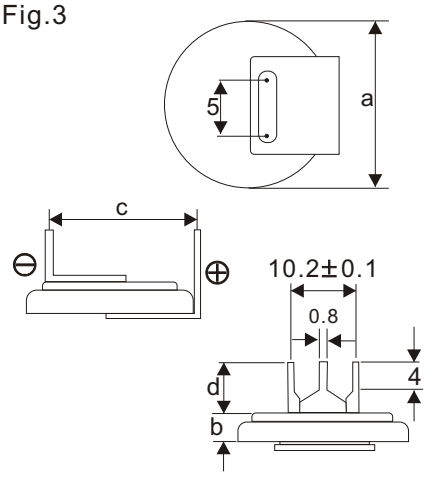

Fig.4

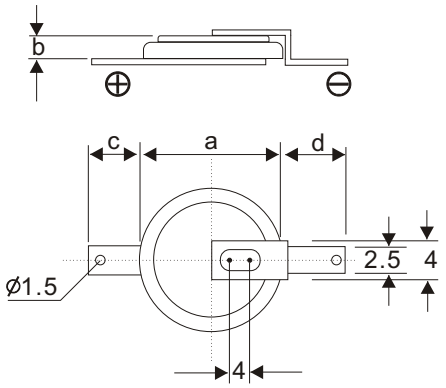

Fig.5

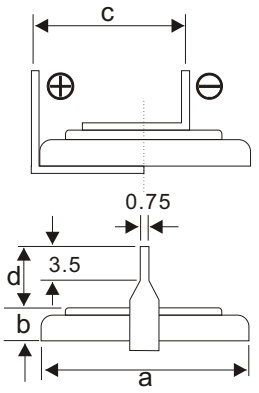

Fig.6

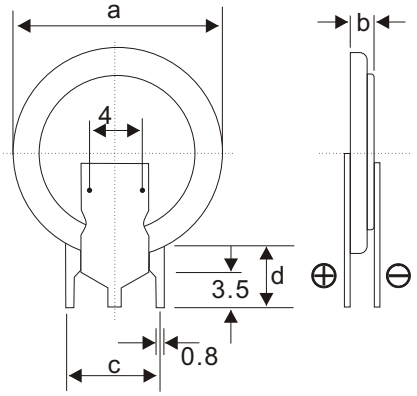

Fig.7

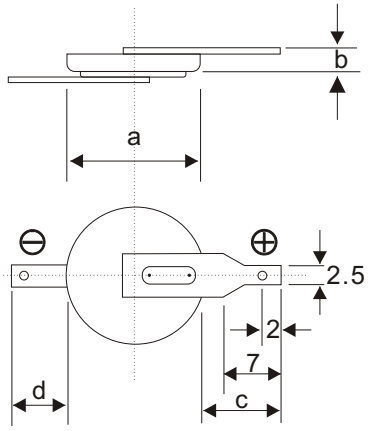

Fig.8

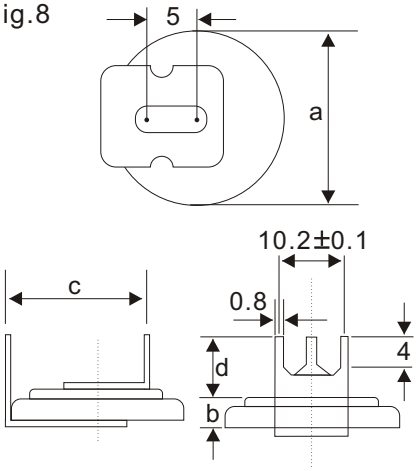

Fig.9

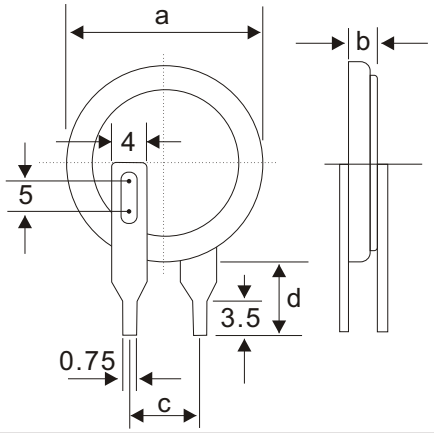

Fig.10

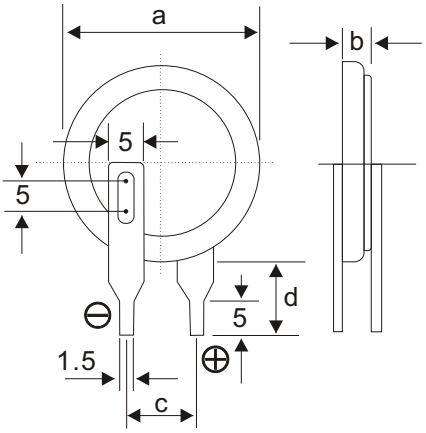

Fig.11

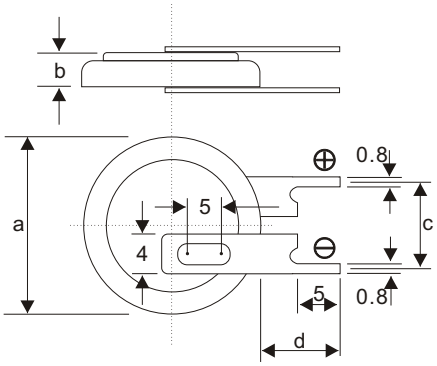

Batteries can be packed and processed according to the requirement of customers.
Please contact our engineers for special order.